Notes :

1. Category: Cap Screws
2. System of Measurement: Metric
3. Head Style: Hex Head
4. Drive Style: Hex Slotted Drive
5. Pitch: Coarse Thread
6. Thread Length: Full Thread
7. Thread Direction: Right-Hand Thread
8. Point: Chamfered Point
9. Material: Thermoplastic
10. Material Grade: Nylon 6/6
11. Coating: Uncoated
12. Coating Color: Natural
13. Standards and Specifications: DIN 933

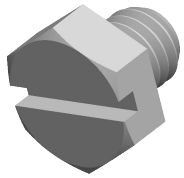

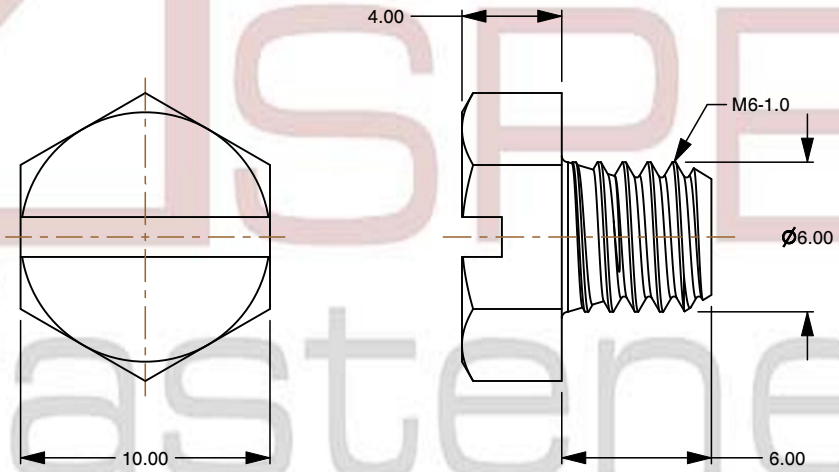

ASPEN fasteners www.aspenfasteners.com	This file and any associated information and specifications are provided for reference and evaluation purposes only and is subject to change without notice. Aspen Fasteners Inc. makes no representations, warranties, or guarantees as to the appropriateness, accuracy, completeness, or suitability for any purpose of the file, information or specifications. You are solely responsible for the use of the file, information, or specifications.	This document is the property of Aspen Fasteners Inc. and the information it contains may not be reproduced, disclosed, or shared with any third party without the expressed written permission of Aspen Fasteners Inc.	PRODUCT NAME M6-1.0 X 6mm DIN 933, Metric, Hex Head Cap Screws Bolts, Slotted Drive, Full Thread, Nylon 6/6	UNIT MILLIMETERS ISSUED 2024-07-10
		SCALE 3.300	PART NUMBER: TP012-610X6	SHEET 1 of 1