**Notes :**

1. Category: Socket Head Cap Screws
2. System of Measurement: Metric
3. Head Style: Flat Countersunk Head
4. Head Style Detail: 90 Degree Countersink
5. Drive Style: Hex Socket Drive
6. Thread Length: Part Thread
7. Thread Direction: Right-Hand Thread
8. Material: Steel
9. Material Grade: Class 12.9 Steel
10. Material Processes:Heat Treated
11. Coating: Oxidized
12. Coating Color: Black
13. Standards and Specifications: DIN 7991 / ISO 10642

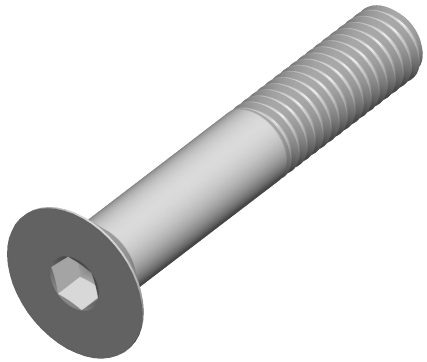

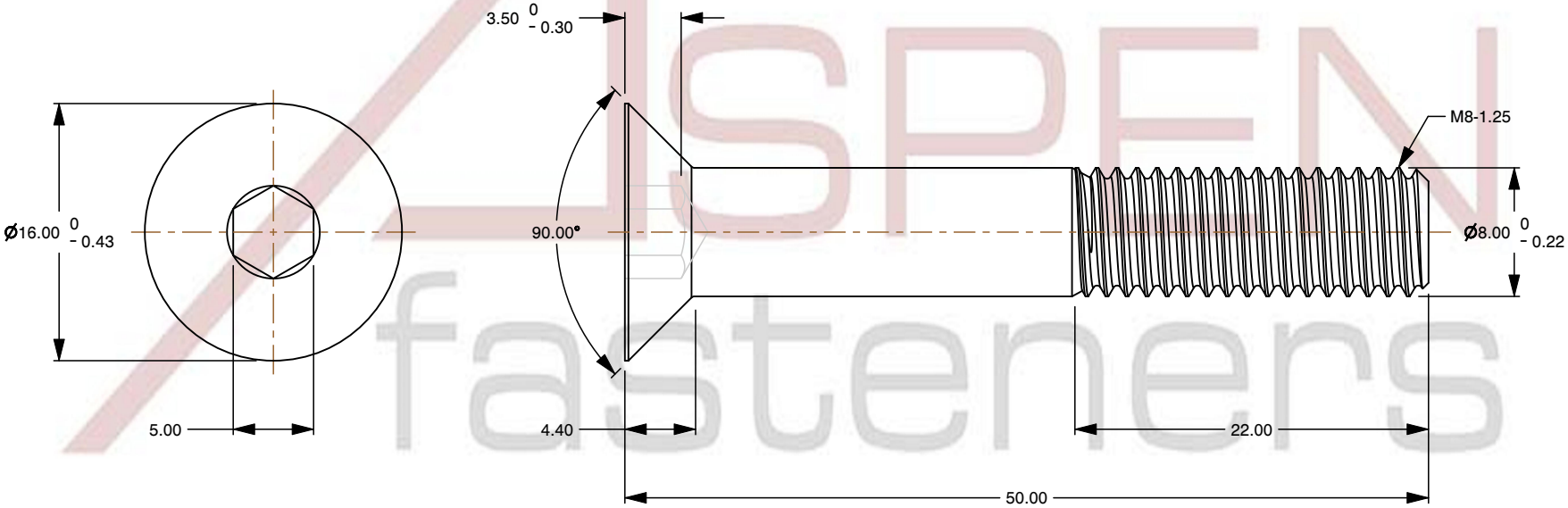


| | | | | |
|---|---|---|---|---|
| ASPEN fasteners<br>www.aspenfasteners.com | This file and any associated information and specifications are provided for reference and evaluation purposes only and is subject to change without notice. Aspen Fasteners Inc. makes no representations, warranties, or guarantees as to the appropriateness, accuracy, completeness, or suitability for any purpose of the file, information or specifications. You are solely responsible for the use of the file, information, or specifications. | This document is the property of Aspen Fasteners Inc. and the information it contains may not be reproduced, disclosed, or shared with any third party without the expressed written permission of Aspen Fasteners Inc. | PRODUCT NAME<br>M8-1.25 X 50mm DIN 7991 / ISO 10642, Metric, Flat Head Socket Cap Screws, Class 12.9 Steel, Black Oxide, Holo-Krome | UNIT<br>MILLIMETERS |
| | | | | ISSUED<br>2024-09-28 |
| | | SCALE 2.381 | PART NUMBER: HK009-8125X50X5 | SHEET 1 of 1 |