Notes :

1. Category: Carriage Bolts
2. System of Measurement: Metric
3. Head Style: Round Head
4. Head Style Detail: Square Neck
5. Thread Length: Standard Thread Length
6. Thread Direction: Right-Hand Thread
7. Material: Stainless Steel
8. Material Grade: A2 Stainless Steel
9. Coating: Uncoated
10. Standards and Specifications: DIN 603 / ISO 8677

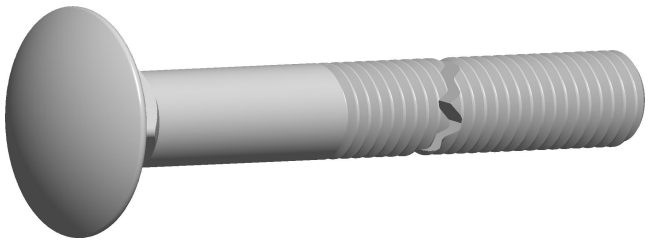

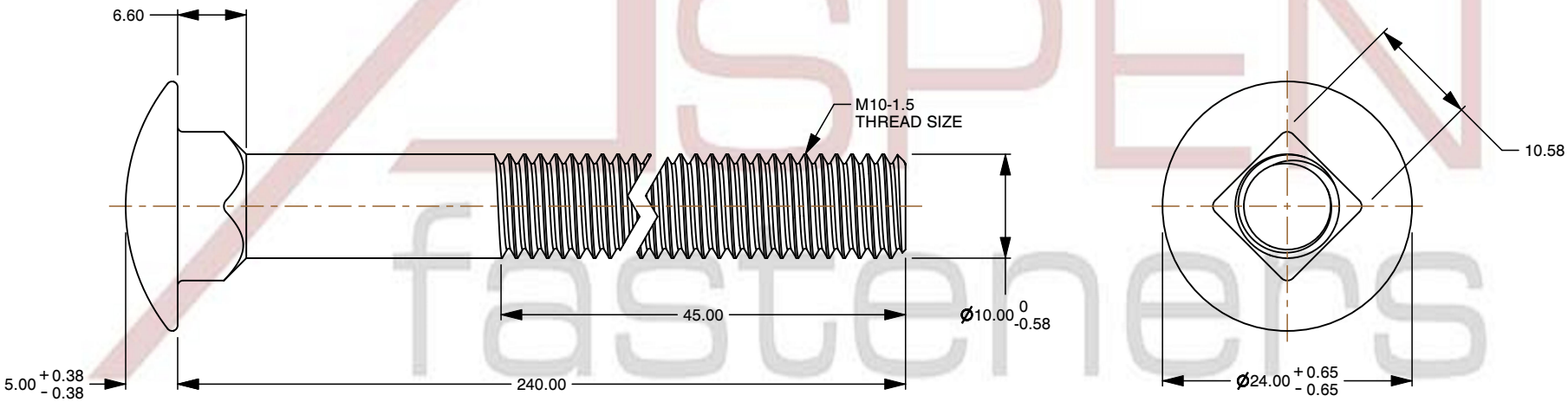

ASPEN fasteners www.aspenfasteners.com	This file and any associated information and specifications are provided for reference and evaluation purposes only and is subject to change without notice. Aspen Fasteners Inc. makes no representations, warranties, or guarantees as to the appropriateness, accuracy, completeness, or suitability for any purpose of the file, information or specifications. You are solely responsible for the use of the file, information, or specifications.	This document is the property of Aspen Fasteners Inc. and the information it contains may not be reproduced, disclosed, or shared with any third party without the expressed written permission of Aspen Fasteners Inc.	PRODUCT NAME M10-1.5 X 240mm DIN 603 / ISO 8677, Metric, Carriage Bolts, Round Head, Square Neck, A2 Stainless Steel	UNIT METRIC
				ISSUED 2023-11-23
		SCALE 1.587	PART NUMBER: ME073-1015X240	SHEET 1 of 1