Notes :

1. Category: Cap Screws
2. System of Measurement: Inch
3. Head Style: Hex Head
4. Head Style Detail: Washer Face
5. Drive Style: External Hex Drive
6. Thread Direction: Right-Hand Thread
7. Point: Chamfered Point
8. Material: Silicon Bronze
9. Coating: Uncoated
10. Standards and Specifications: ASME B18.2.1

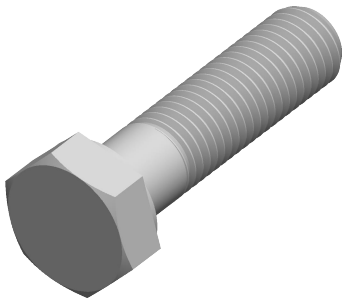

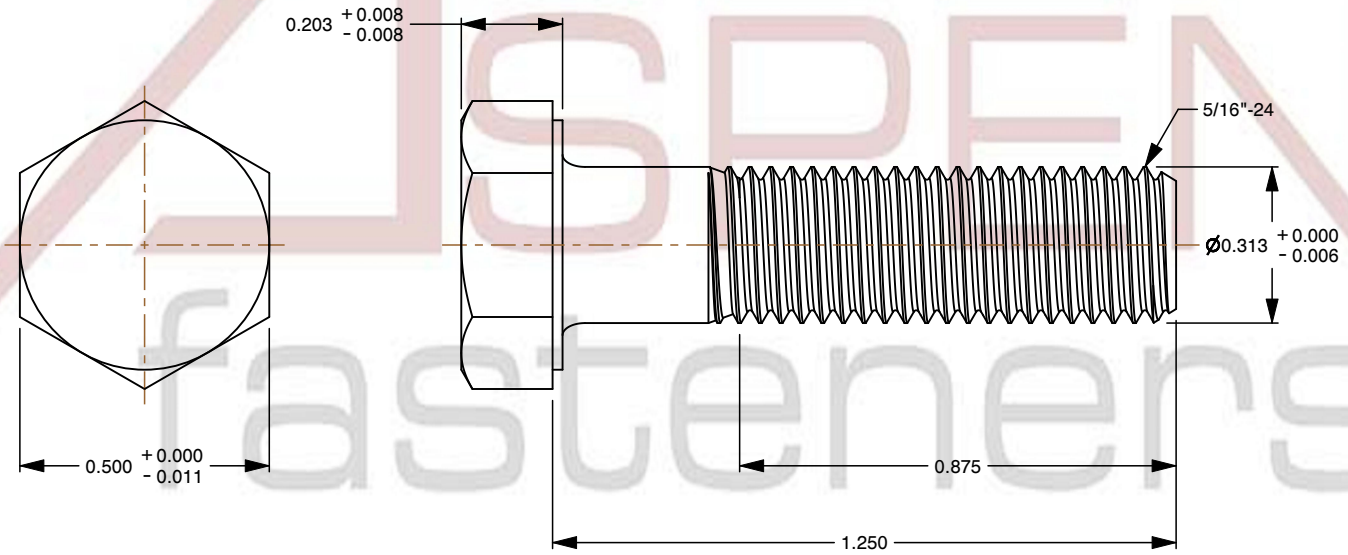

ASPEN fasteners www.aspenfasteners.com	This file and any associated information and specifications are provided for reference and evaluation purposes only and is subject to change without notice. Aspen Fasteners Inc. makes no representations, warranties, or guarantees as to the appropriateness, accuracy, completeness, or suitability for any purpose of the file, information or specifications. You are solely responsible for the use of the file, information, or specifications.	This document is the property of Aspen Fasteners Inc. and the information it contains may not be reproduced, disclosed, or shared with any third party without the expressed written permission of Aspen Fasteners Inc.	PRODUCT NAME 5/16"-24 X 1-1/4" Hex Head Cap Screws Bolts, Silicon Bronze	UNIT INCHES ISSUED 2024-01-09
		SCALE 2.598	PART NUMBER: BO118-51624X114	SHEET 1 of 1