**Notes :**

1. Category: Carriage Bolts
2. System of Measurement: Metric
3. Head Style: Round Head
4. Head Style Detail: Square Neck
5. Thread Length: Standard Thread Length
6. Thread Direction: Right-Hand Thread
7. Material: Steel
8. Material Grade: Class 4.6 Steel
9. Coating: Zinc Plated
10. Coating Color: Clear
11. Standards and Specifications: DIN 603 / ISO 8677

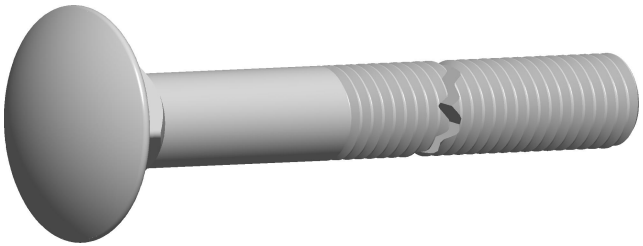

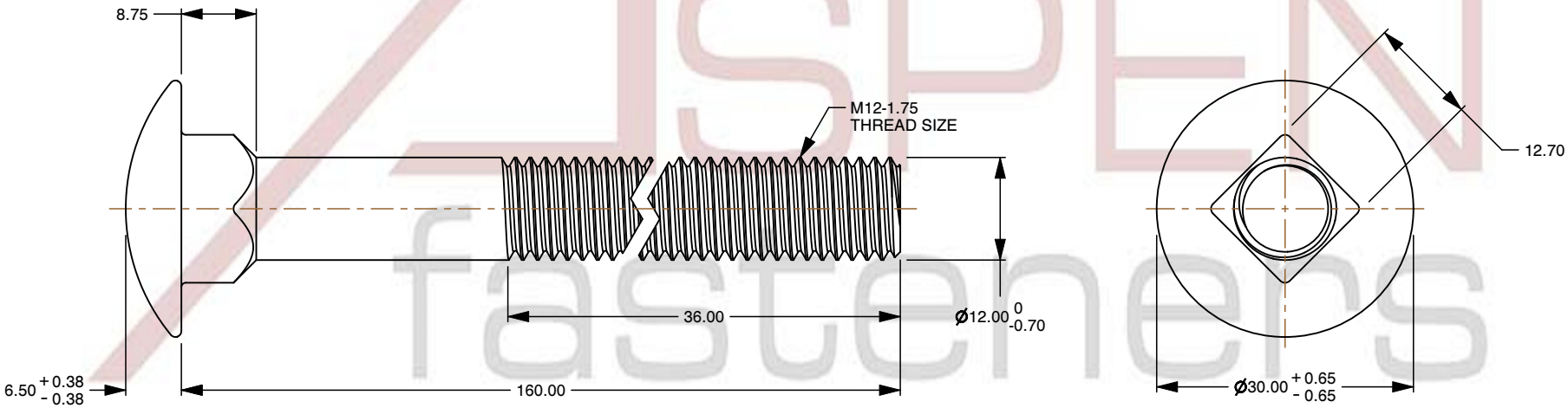


| | | | | |
|---|---|---|---|---|
| ASPEN fasteners<br>www.aspenfasteners.com | This file and any associated information and specifications are provided for reference and evaluation purposes only and is subject to change without notice. Aspen Fasteners Inc. makes no representations, warranties, or guarantees as to the appropriateness, accuracy, completeness, or suitability for any purpose of the file, information or specifications. You are solely responsible for the use of the file, information, or specifications. | This document is the property of Aspen Fasteners Inc. and the information it contains may not be reproduced, disclosed, or shared with any third party without the expressed written permission of Aspen Fasteners Inc. | PRODUCT NAME<br>M12-1.75 X 160mm DIN 603 / ISO 8677, Metric, Carriage Bolts, Round Head, Square Neck, Class 4.6 Steel, Zinc | UNIT<br>METRIC<br>ISSUED<br>2023-11-23 |
| | | SCALE 1.306 | PART NUMBER: ME105-12175X160 | SHEET 1 of 1 |